Headers(Sockets) for pluggable terminal blocks ／ ECH & EHD series

7EHDRM

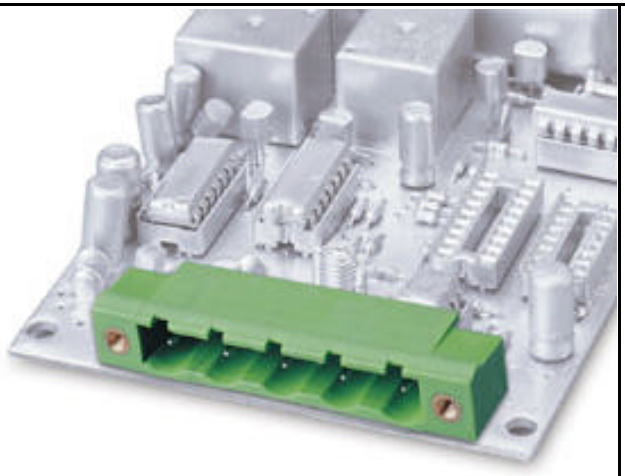

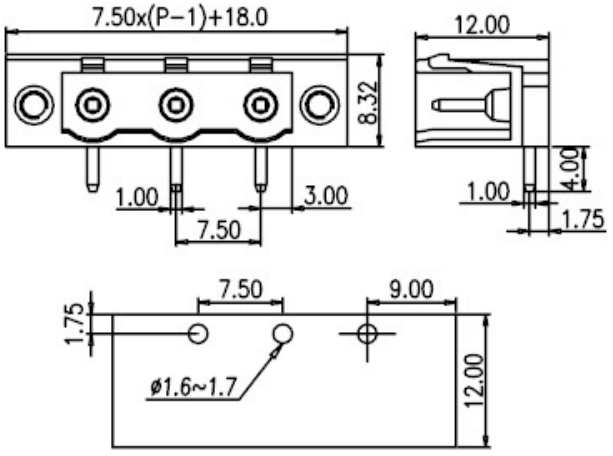

Pitch: 7.50mm

Approval		
Technical Data	UL	IEC
Rated voltage	300V	750V
Rated current	15A	17.5A
Wire range		
Solid wire (AWG)		
Stranded wire (AWG/mm^2)		
Rated surge voltage (UL/IEC/Max.)	1.6 / 3 / 4 KV	
Torque (Lb-in)		
Screw		
Wire strip length		

Pole	Cat. No.
02	7EHDRM-02P
:	:
:	:
12	7EHDRM-12P