Mini type, simple type cage clamp terminal blocks ／ 144 series

144RA-..P3

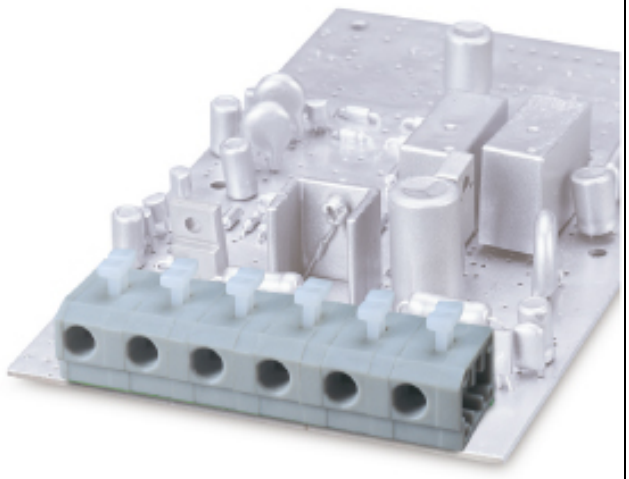

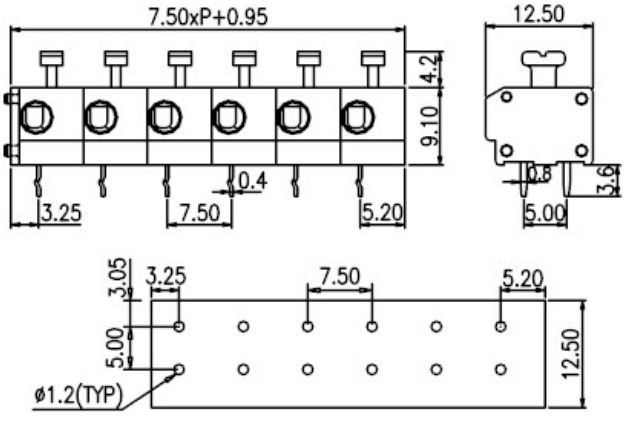

Pitch: 7.50mm

Approval		
Technical Data	UL	IEC
Rated voltage	300V	750V
Rated current	10A	24A
Wire range		2.5mm^2
Solid wire (AWG)	20~14	
Stranded wire (AWG/mm^2)	20~14	
Rated surge voltage (UL/IEC/Max.)	1.6 / 2.5 / 4 KV	
Torque (Lb-in)		
Wire strip length	6~7mm	
End Cover	144E	

Pole	Cat. No.
02	144RA-02P3
:	:
:	:
24	144RA-24P3